Priyal Corporation

avcon®

DATA SHEET
HMV

Hydro Motor Valve, Type HMV

FEATURES :

- Slow opening, fast shut- off
- Robust construction
- Economically priced

OPERATING PRINCIPLE :

Hydro Motor Valve HMV is normally closed, hydraulically operated safety valve. When the mains signal is given to an actuator, the internal oil pump builds up the pressure. This oil pressure slowly acts from downward direction on actuator piston. The oil pump switches off as the valve opens completely. The pressure is continuously maintained within the actuator. In event of occurrence of drop in pressure while closing the valve, the mains voltage has to be disconnected. After disconnecting the mains signal, the oil pressure is revealed and the valve disc is getting closed within 1 second with the help of closing spring force.

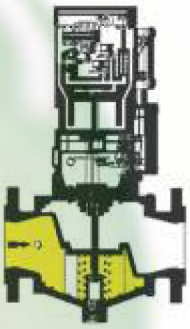

OPENING TIME :
HMV.. A, HMV.. G,
~ 5 sec. for 40 NB
~ 8 sec. for 50- 65 NB
~ 10 sec. for 80- 100NB
~ 13 sec. for 125NB

HMV.. H
~ 18 sec. for 50- 100 NB
~ 24 sec. for 125- 250 NB

CONSTRUCTION :

- Valve Body : Aluminium Silicon Alloy or Cast Iron/ SG Iron
- Valve Disc : Aluminium Silicon Alloy
- Valve Disc Seal : Perbunan/ Polyurethane / Viton
- End Connection : Flanged to DIN PN 16 or ANSI B 16. 5, Class 150 RF
- Working Temperature : (-) 15°C to (+) 60°C
- Working Pressure : 230 milibar to 8 bar
- Voltage : 230 VAC (+10/-15%), 50/ 60 Hz Standard
  110 VAC(+10/-15%), 50/ 60 Hz Optional
- Fluids : Natural Gas, LPG in gaseous form, Town Gas, Biogas.

APPLICATION :

To control and regulate the gas, air flow to burners and other combustion devices. HMV is a unique safety valve that can be supplied for the requirement of handling higher normal pressure and higher flow where normal Solenoid Valves have limitations. HMV is highly dependable valve to be used on combustion equipment especially in Furnaces, Boilers, Ovens, Blast Furnace and Producer gas installations. gas delivery lines, and oil & gas refineries. etc. where safety requirements are very high.

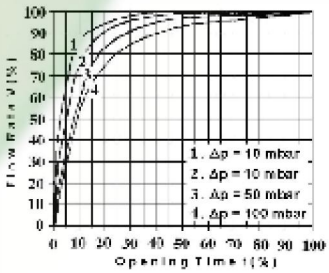

SELECTION CHART FOR HYDRO MOTOR VALVE (HMV)

HMV	Type	Hydro Motor Valve	
50	Size mm	40, 50, 65, 80, 100, 125, 150, 200, 250	
F A	End Connections	= Flanged to DIN PN16 = Flanged to ANSI B 16.5, Class150 RF	
20	Inlet pressure	02 = 230 mbar 04 = 400 mbar 05 = 500 mbar 06 = 600 mbar 10 = 1000 mbar 15 = 1500 mbar 20 = 2000 mbar 24 = 2400 mbar 31 = 3100 mbar 40 = 4000 mbar 60 = 6000 mbar 80 = 8000 mbar	
T5	Mains Voltage	T5 = 220/ 240 V, 50/ 60 Hz M = 110 V, 50/ 60 Hz,	Q6 = 120 V, 50 Hz K = 24V DC
H	Actuator for	Higher Inlet Pressure	
A	Valve Body	A = Aluminium Silicon Alloy	G = Cast Iron/ GGG 40
9	Connection Box	9 = With IP54 terminal	6 = With Standard Socket
3	Screw at the inlet and outlet		
D *	With flow adjuster		
S *	With position indicator		
R *	With Holding Relays		
V *	With Viton Seal		
(*) Optional Feature, when (*) this letter is dropped, the next letter moves up.			

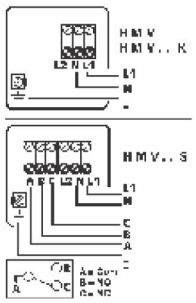

Electrical Connections

Priyal Corporation

avcon®

DIMENSIONAL DETAILS :

Type Model	DIMENSIONS								Drilling		Max Press		Volume	Flow	Electrical Details				Weight	
	Size	L	H1	H2	H3	D1	D2	K	D2	Anz	AISI	Cast Steel	(Δp= 1mbar Air)	Factor kv	To Open		When Open		AISI	Cast Iron
	mm	mm	mm	mm	mm	mm	mm	mm	mm		bar	bar	m^3/ hr	m^3/ hr	VA	W	VA	W	Kgs.	Kgs.
HMV 40	40	200	345	100	430	127	150	110	18	4	1/4	-	27.5	31.3	90	50	9	9	9	-
HMV 50	50	230	350	117	435	155	165	125	18	4	1/4	4	45.0	51.2	90	50	9	9	11	20.5
HMV 50 H	50	230	414	117	-	115	165	125	18	4	-	8	45.0	51.2	90	50	9	9	-	21
HMV 65	65	290	370	135	455	182	185	145	18	4	1/3.1	3.10	70.0	79.6	90	50	9	9	13	26
HMV 65 H	65	290	434	135	-	182	185	145	18	4	-	8	70.0	79.6	90	50	9	9	-	27
HMV 80	80	310	378	137	463	210	200	160	18	8	½.4	2.40	103.0	117.1	90	50	9	9	15	32
HMV 80 H	80	310	442	137	-	210	200	160	18	8	-	6	103.0	117.1	90	50	9	9	-	33
HMV 100	100	350	400	163	485	248	229	180	18	8	1	1	148.0	168.3	90	50	9	9	19	41.5
HMV 100 H	100	350	464	163	-	248	220	180	18	8	-	4	148.0	168.3	90	50	9	9	-	43
HMV 125	125	400	450	158	535	314	250	210	18	8	0.6	0.60	206.0	234.2	90	50	9	9	24	60
HMV 125 H	125	400	514	158	-	314	250	210	18	8	1	2	206.0	234.2	90	50	9	9	25	61
HMV 150	150	480	445	173	530	344	285	240	23	8	0.4	0.40	310.0	352.5	90	50	9	9	32	80
HMV 150 H	150	480	509	173	-	344	285	240	23	8	1	1.50	310.0	352.5	90	50	9	9	33	81
HMV 200	200	600	475	218	560	420	340	295	23	12	0.23	0.23	490.0	557.2	90	50	9	9	52	141
HMV 200 H	200	600	539	218	-	420	340	295	23	12	1	1	490.0	557.2	90	50	9	9	53	142
HMV 250 H	250	730	573	270	-	496	405	355	27	12	0.5	-	590.0	670.0	90	50	9	9	80	-

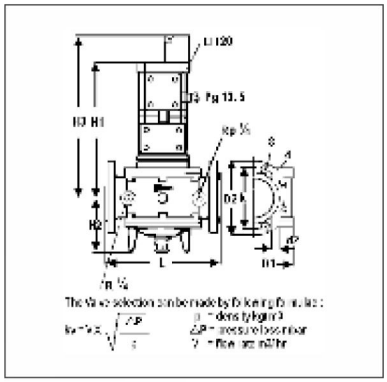

VOLUMETRIC FLOW DIAGRAM

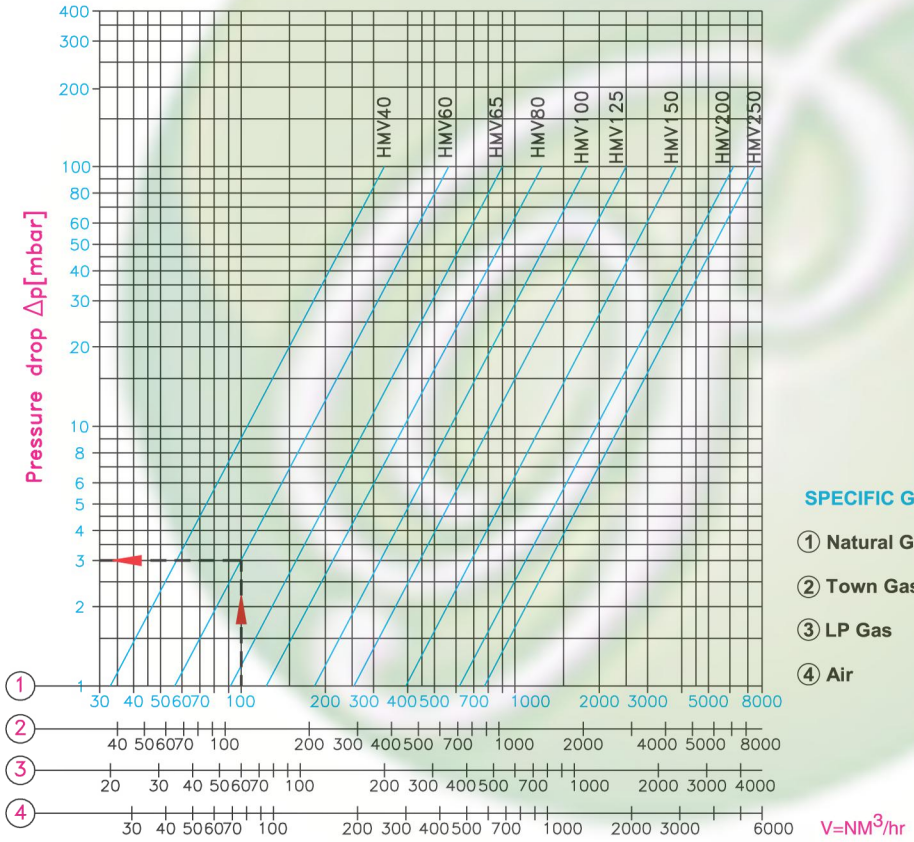

SPECIFIC GRAVITY :

① Natural Gas = 0. 62

② Town Gas = 0. 45

③ LP Gas = 1. 56

④ Air = 1. 00

Note :

While reading operating cubic meters in the diagram without converting to m^3/ hr(n), the pressure drop as read, is to be multiplied with the absolute pressure in bar (1 + positive pressure in bar)

Example :

Hydro Motor Valve HMV 50, flow rate = 100 m^3/ hr of Natural Gas. Gas Pressure @ 4 bar from Diagram, read HMV 50 @ 100 m^3/ hr @ 3 mbar Ap = 3 X (4 + 1) = 15 mbar at the Hydro Motor Valve HMV50

Note:

Technical specifications and dimensions are subject to change without prior notice.
Dimensions in the table are approximate subject to final confirmation by AVCON.

avcon®

Authorised Distributor :

Priyal Corporation

"PRIYAL HOUSE", 14, Kameshwar Estate, Plot No. 3609,
Phase-4, Nikatube Cross Road, GIDC, Vatva, Ahmedabad - 382 445.
Phone : 079-25841150 / 51 Fax : 079-25841150 Mobile : 98240 15888
E-mail : edirect@priyalcorporation.com Website : www.priyalcorporation.com